Comparator Stands

SERIES 215

Comparator Stands consists of a very stable, cast-iron base and an upright column with a mounting bracket that features fine adjustment. The grid type anvil prevents very flat workpieces from wringing to it.

215-405-10

Optional Accessories

21JAA329: ø8mm bush*
21JAA330: ø9.53mm (3/8") bush*
21JAA331: ø15mm bush*
*Only available for **215-505-10**.

SPECIFICATIONS

Order No.	Square anvil size (W x D)	Column travel	Stem hole	Remarks
215-405-10	110 x 110mm	235mm	ø8mm, ø9.53mm	With fine adjustment of 1mm range
215-505-10	150 x 150mm	275mm	ø8mm, ø9.53mm, ø20mm	With fine adjustment over the entire travel

DIMENSIONS

Unit: mm

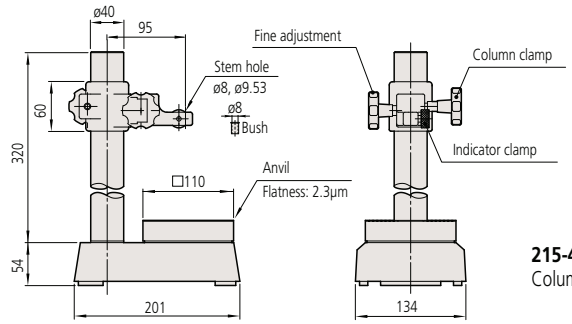

215-405-10
Column travel: 0 - 235mm

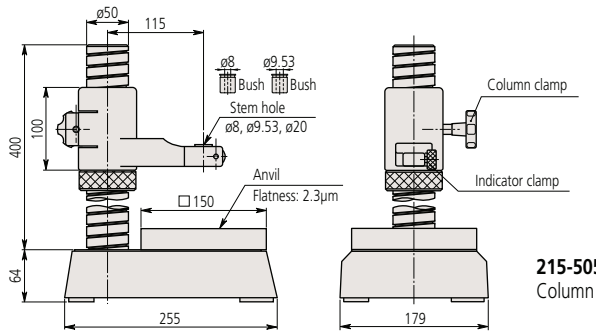

215-505-10
Column travel: 0 - 275mm

F

Mitutoyo